Spezifikation **Specification** **Spécification**

Roboter
Robots

KR 125
KR 125 L100
KR 125 L90

KR 150
KR 200

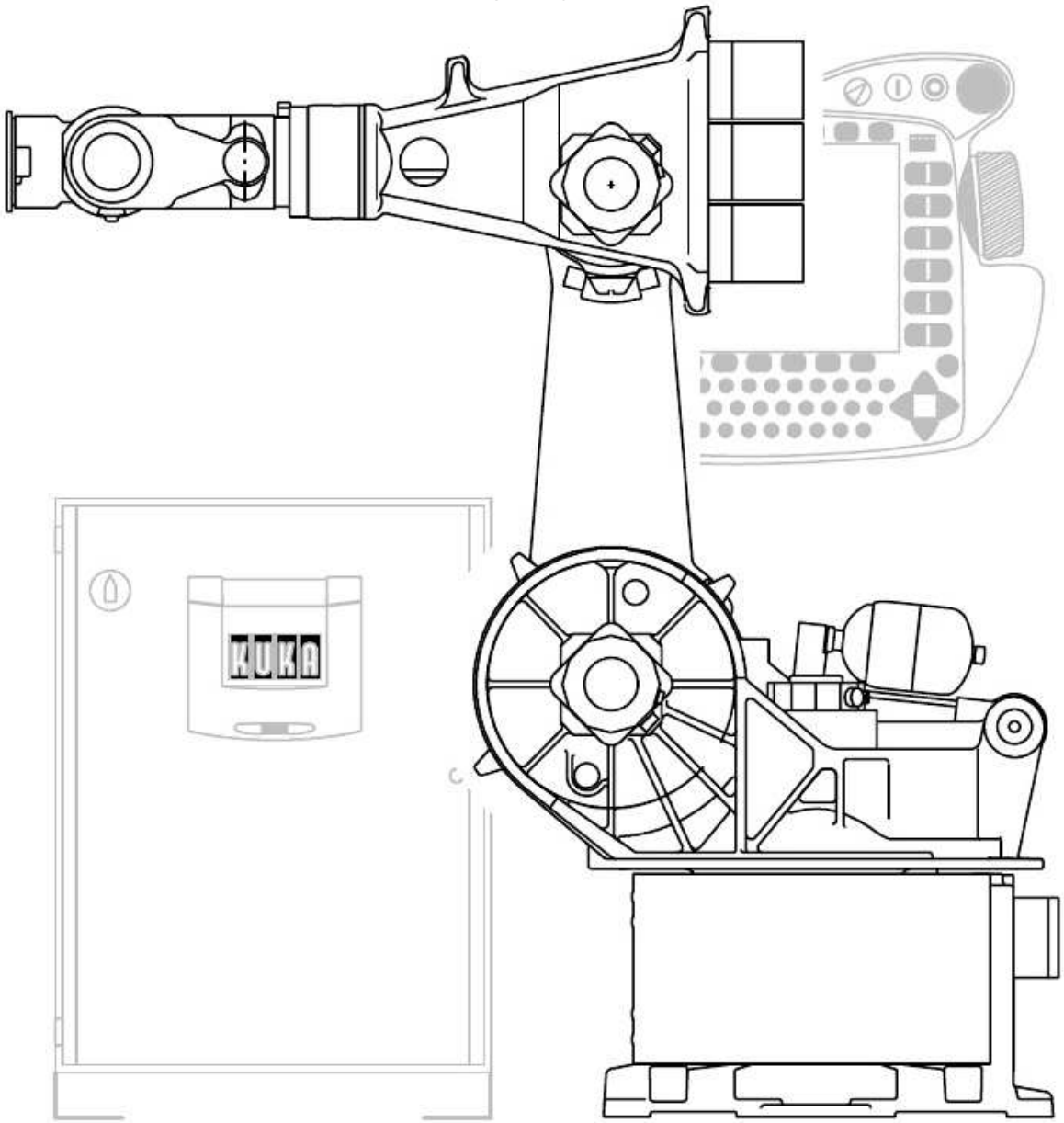

Contents

1 SYSTEM DESCRIPTION

1.1 General

The KR 125/1, KR 150/1 and KR 200/1 robots (Fig. 1-1) are six-axis industrial robots with articulated kinematics for all point--to--point and continuous-path controlled tasks. Their main areas of application are

- MIG/MAG welding
- YAG laser beam welding
- spot welding
- machining
- handling
- assembly
- application of adhesives, sealants and preservatives.

They are designed for installation on the floor or ceiling.

The rated payload of 125 kg on the wrist and a maximum supplementary load (for this rated payload) of 120 kg on the robot's arm can be moved at maximum speed even with the arm fully extended. This also applies to the variants KR 125 L100/1 with 100 kg rated payload, 120 kg supplementary load, and KR 125 L90/1 with 90 kg rated payload, 120 kg supplementary load. They differ from the KR 125/1 in their arm, which is 200 mm and 400 mm longer respectively.

For the KR 150/1 with 150 kg rated payload and the KR 200/1 with 200 kg rated payload, a maximum supplementary load of 95 kg and 80 kg respectively is allowed.

All the main bodies of the moving principal assemblies are made of cast light alloy. This design concept has been optimized by means of CAD and FEM with regard to cost-effective lightweight construction and high torsional and flexural rigidity. As a result, the robot has a high natural frequency and is thus characterized by good dynamic performance with high resistance to vibration.

The joints and gears are virtually free from backlash; all moving parts are covered. All the axes are powered by brushless AC servomotors of plug--in design, which require no maintenance and offer reliable protection against overload.

The main axes are lifetime--lubricated, i.e. an oil change is necessary only every 20,000 operating hours.

All the robot components are of intentionally simple and straightforward configuration; the number of them has been minimized and they are all readily accessible. The robot can also be quickly replaced as a complete unit without any major program corrections being required. Overhead motion is possible.

These and numerous other design details make the robots fast, reliable and easy to maintain, with minimal maintenance requirements. They occupy very little floor space and can be located very close to the workpiece on account of the special structural geometry. Like all KUKA robots, they have an average service life of 10 to 15 years.

Each robot is equipped with a controller, whose control and power electronics are integrated in a common cabinet (see separate specification). The controller is compact, user-friendly and easy to service. It conforms to the safety requirements specified in the EU machinery directive and the relevant standards (including EN 775).

The connecting cables between the robot and the controller contain all the relevant energy supply and signal lines. The cable connections on the robot are of the plug-in type, as too are the energy

and fluid supply lines for the operation of end effectors (accessory "integrated energy supply for axis 1"). These lines are permanently installed inside main axis 1 of the robot and can be routed along the downstream axes to the end effector with the aid of system interfaces if required.

1.2 Robot mechanics

The robot consists of a fixed baseframe, onwhich the rotating column turns about a vertical axis together with the link arm, arm and wrist (Fig. 1--1).

The wrist (Fig. 1--2) is provided with a mounting flange for the attachment of end effectors (e.g. grippers, welding tools).

The possible movements of the robot axes are depicted in Figure 1--3.

Thepayload and thedeadweight of thearticulated components are statically compensated to a large extent by a closed hydropneumatic counterbalancing system, which assists axis 2. Its effectcanbevarieddependingonthepayloadand supplementary load of the particular application and on the installation position of the robot.

The positions of the main and wrist axes (A1 to A3 and A4 to A6) are sensedby means of anabsolute position sensing system featuring a resolver for each axis.

Each axis is driven by a transistor--controlled, low-inertia AC servomotor. The brake and resolver are space--efficiently integrated into the motor unit.

Theworking range of therobot is limited by means of software limit switches on all axes. The working ranges of axes 1, 2, 3 and 5 are mechanically limited by end stops with a buffer function.

Mechanical stops for the application-specific limitation of the respective working ranges of axes 1 to 3 are available as the "working range limitation" accessory.

1.3 Installation

There are several possible methods of installing the robot:

- **Variant 1**

  This variant is available with dowels anddrilling plan as the "floor mounting kit" accessory.
  The robot is placed onto the prepared shop floor without intermediate plates and fastened by means of eight dowel bolts (Fig. 1--4). A special tool with backing-off attachment is required for preparing the dowel boreholes.

- **Variant 2**

  This variant is available with locating pins and bolts as the "frame mounting kit" accessory.
  The robot is placed on a prepared steel construction and fastened with eight bolts (Fig. 1-5). Its position of installation is fixed by means of two locating pins, enabling it to be exchanged in a repeatable manner.

- **Variant 3**

  This variant is available with intermediate plates, locating pins, dowels and bolts as the "mounting base kit" accessory.
  The robot is mounted together with four intermediate plates (Fig. 1-6) on the prepared shop floor. Its position of installation is fixed by means of two locating pins, enabling it to be exchanged in a repeatable manner. The robot is fastened to theintermediate plates with eight bolts.
  Each of the intermediate plates is fastened to the shop floor with four dowel bolts before the robot is mounted on them.

IMPORTANT with regard to variants 1 and 3: When preparing the foundation, the pertinent construction specifications regarding the grade of concrete (≥ B 25 according to DIN 1045) and the load bearing capacity of the ground must be observed. It must be ensured that the surface of the foundation is level and sufficiently smooth.

The insertion of the dowels must be carried out with great care to ensure that the forces occurring during operation (Fig. 1--7) will be safely transmitted to the ground. Figure 1--7 can also be used asa basis for moreextensive static investigations.

1.4 Interchangeability

In manufacturing systems with a large number of robots, it is important for the robots to be readily interchangeable. This is ensured by

- the reproducibility of the synchronization positions marked by the manufacturer on all axes, the so-called mechanical zero positions, and
- the computer-aided zero adjustment procedure,

and is additionally supported by

- off-line programming, which can be carried out in advance and remotely from the robot, and
- the reproducible installation of the robot.

After service and maintenance work (on the wrist and motors, for example), it is necessary to establish coincidence between the electrical and mechanical zero positions (calibration) of the robot. A gage cartridge is mounted by the manufacturer on each robot axis for this purpose.

These gage cartridges are set by the manufacturer when the robot is calibrated prior to shipment. The fact that measurements on each axis are always made using the same cartridge means that maximum accuracy is achieved both when first calibrating the mechanical zero position and when subsequently relocating it.

The position of the mechanical probe fitted in the gage cartridge can be displayed by screwing an electronic probe (KTL adjustment set), available as an accessory, onto the cartridge. The position sensing system is automatically set to electrical zero when the probe passes the reference notch during the adjustment procedure.

The robot can resume operation once the zero adjustment has been carried out on all axes.

The procedures described make it possible for the programs, once defined, to be transferred at any time to any other robot of the same type.

1.5 Transportation

It must be ensured that the robot is stable while it is being transported. The robot must remain in its transport position as long as it is not fastened to the foundation.

There are two methods of transporting the robot (Fig. 1--8):

a With lifting tackle and crane (or fork lift truck)
The robot can be suspended from the hook of a crane or the fork of a fork lift truck by means of lifting tackle attached to three eyelets on the rotating column.

Only approved lifting tackle with an adequate carrying capacity may be used for transporting the robot by crane.

b With fork lift truck
For transport by fork lift truck, two slots are provided in the base frame, allowing the robot to be picked up from either of two sides.
For installation on the ceiling, the robot is delivered inverted in a special transport frame, out of which it can be taken with a fork lift truck, already in the correct orientation, and brought to the site of installation.

Before being transported, the robot must be brought into its **transport position**:

A1	A2	A3	A4	A5	A6
0°	--40°	+58°	0°	+90°	any

2 ACCESSORIES (selection)

2.1 Robot installation

There are three variants available for installing the robot:
- with floor mounting kit (Fig. 1-4)
- with frame mounting kit (Fig. 1-5)
- with mounting base kit (Fig. 1-6)

See Section 1.3 for a description.

2.2 Additional linear axis

With the aid of a linear unit as an additional traversing axis, based on the KL 2000 series (Fig. 2--1), the robot can be moved translationally. The axis is freely programmable and can be installed on the floor or the ceiling.

2.3 Integrated energy supply for axis 1

Various energy supply systems are available, including systems for the applications ”handling” and ”spot welding”. In the area of axis 1, the necessary supply lines run inside the robot from the plug connection panel to an interface on the rotating column (Fig. 2--2).

From here, supply lines can additionally be routed externally along the link arm and arm to an appropriate interface on the end effector. This eliminates the need for a space-consuming supply boom.

2.4 Working range monitoring

Axes 1 to 3 can be equipped with proximity switches and slotted rings to which adjustable cams are attached. This allows the position of the robot to be continuously monitored. If personnel protection is required, mechanical limit switches are used instead of proximity switches.

Up to three sectors of the movement range can be monitored on axes 1 and 2, and up to two sectors on axis 3.

If axes 2 and 3 are equipped with working range monitoring, an ”energy supply system for axis 1” with an additional control cable is required.

2.5 Working range limitation

The movement ranges of axes 1 to 3 can be limited by means of additional mechanical stops as required by the application.

Axis 1:	from +5° to +110° and --5° to --110°, adjustable in 15° steps.
Axis 2:	from +48° to --5°, adjustable in 15° steps.
Axis 3:	from 0° to --150°, adjustable in 15° steps.

2.6 KTL adjustment set

The zero adjustment operation, which is necessary for all axes, can be performed with the aid of the electronic probe belonging to a KTL adjustment set (Fig. 2--3 and 3--8). This probe provides a particularly fast and simple means of measurement and allows automatic, computer-aided adjustment. It should be included in the order for the robot.

2.7 Belt tension checking device for in-line wrist

For the purpose of checking the belt tension, a reproducible test force is applied to the belt by means of a plunger and the deflection is checked in relation to a mark (Fig. 2-4).

2.8 Filling and testing equipment for diaphragm accumulator

With these accessories (Fig. 2--5), the closed hydraulic system for counterbalancing axis 2 can be matched to various installation and payload conditions. The equipment consists of a hydraulic pump, an accumulator filling device and connecting hoses. The nitrogen required for priming the counterbalancing system can be purchased in standard commercial gas cylinders.

2.9 Release device for robot axes

This device can be used to move the robot mechanically via the drive motors after a malfunction.

3 TECHNICAL DATA

Types KR 125/1, KR 125 L100/1
KR 125 L90/1
KR 150/1
KR 200/1

Number of axes 6 (Fig. 1-3)

Load limits also see Fig. 3-1

Robot type	KR 125/1	KR 125 L100/1	KR 125 L90/1	KR 150/1	KR 200/1
Wrist (IW)[1]	125 kg	125 kg	125 kg	150 kg	200 kg
Rated payload [kg]	125	100	90	150	200
Supplementary load with rated payload [kg]	120	120	120	95	80
Max. total distributed load [kg]	245	220	210	245	280
Arm length [mm]	1000	1200	1400	1000	1000

[1] IW = in--line wrist

The relationship between the payload and its point of application may be noted from Figures 3--2 to 3--6.

Axis data

The axis data may be noted from the next page. The axes and their possible motions are depicted in Figure 1-3. Axes 1 to 3 are the main axes, axes 4 to 6 the wrist axes.

Repeatability ±0.2 mm

Drive system electromechanical, with transistor--controlled brushless AC servomotors

Principal dimensions see Figure 3--9

Weight

KR 125/1:	975 kg
KR 125 L100/1:	990 kg
KR 125 L90/1:	995 kg
KR 150/1:	1120 kg
KR 200/1:	1120 kg

Sound level < 75 dB (A) outside the working envelope

Mounting position floor or ceiling, permissible angle of inclination ≤15°

Installation see Section 1.3

Point of payload application P see Figures 3-2 to 3--6

For all rated payloads, the horizontal distance of the point of payload application P from the face of the mounting flange is 210 mm and the vertical distance from rotational axis 6 is 230 mm (nominal distance in each case).

Special consumables

Hydraulic oil and nitrogen gas in standard commercial containers for recharging the counterbalancing system when the system pressure is altered.

Working envelope

The shape and dimensions of the working envelope may be noted from Figure 3--9.

Working volume

The volume of the working envelope is as follows:

KR 125/1, KR 150/1, KR 200/1	approx. 39 m^3
KR 125 L100/1	approx. 51 m^3
KR 125 L90/1	approx. 65 m^3

The reference point is the intersection of axes 4 and 5.

Ambient temperature

- During operation:
  283 K to 318 K (+10 °C to +45 °C)
- During storage and transportation:
  233 K to 333 K (-40 °C to +60 °C)

Other temperature limits available on request.

KR 125/1
KR 125 L100/1
KR 125 L90/1

- **In-line wrist, rated payload 125 kg**

Axis	Range of motion software--limited	Speed
1	±185°	100 °/s
2	+93° to --40°	100 °/s
3	+58° to --210°	100 °/s
4	±350°	154 °/s
5	±120°	167 °/s
6	±350°	251 °/s

KR 150/1

- **In-line wrist, rated payload 150 kg**

Axis	Range of motion software--limited	Speed
1	±185°	76 °/s
2	+93° to --40°	76 °/s
3	+58° to --210°	76 °/s
4	±350°	118 °/s
5	±120°	128 °/s
6	±350°	168 °/s

KR 200/1

- **In-line wrist, rated payload 200 kg**

Axis	Range of motion software--limited	Speed
1	±185°	76 °/s
2	+93° to --40°	76 °/s
3	+58° to --210°	76 °/s
4	±350°	97 °/s
5	±120°	106 °/s
6	±350°	113 °/s

Installed motor capacity 19.8 kW

Protection classification of the manipulator IP 64
(according to IEC 529)
ready for operation,
with connecting cables plugged in

Colors

Base (stationary): black (RAL 9005).
Moving parts: orange (RAL 2003).
Counterbalancing system: black (RAL 9005).
Special colors available on request.

Mounting flange on axis 6

The robot is fitted with a DIN/ISO mounting flange[1] (Fig. 3--7).
Screw grade for attaching end effector 10.9
Minimum screw grip 1.5 x d

NOTE: The flange is depicted with all axes of the robot, particularly axis 6, in the zero position (the symbol ♦ indicates the position of the locating element).

[1] DIN/ISO 9409-1-A160

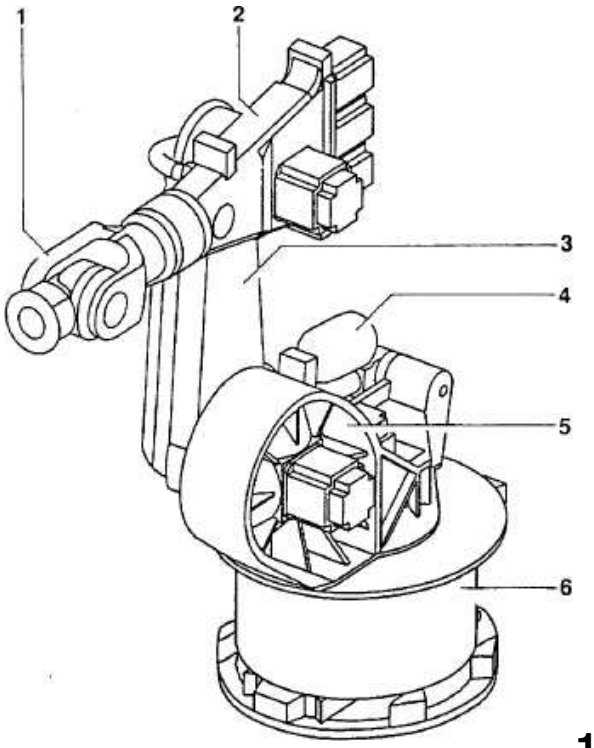

1 Hand
2 Arm
3 Schwinge
4 Gewichtsausgleichssystem
5 Karussell
6 Grundgestell

1 Wrist
2 Arm
3 Link arm
4 Counterbalancing system
5 Rotating column
6 Base frame

1 Poignet
2 Bras
3 Epaule
4 Système d'équilibrage
5 Bâti de rotation
6 Embase

1--1 Hauptbestandteile des Roboters
Principal components of the robot
Sous--ensembles principaux du robot

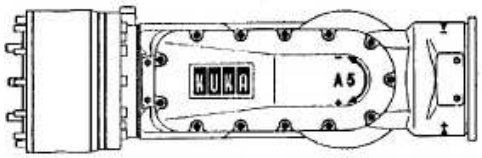

1--2 Zentralhand (ZH) 125/150/200 kg
In--line wrist (IW) 125/150/200 kg
Poignet en ligne (PL) 125/150/200 kg

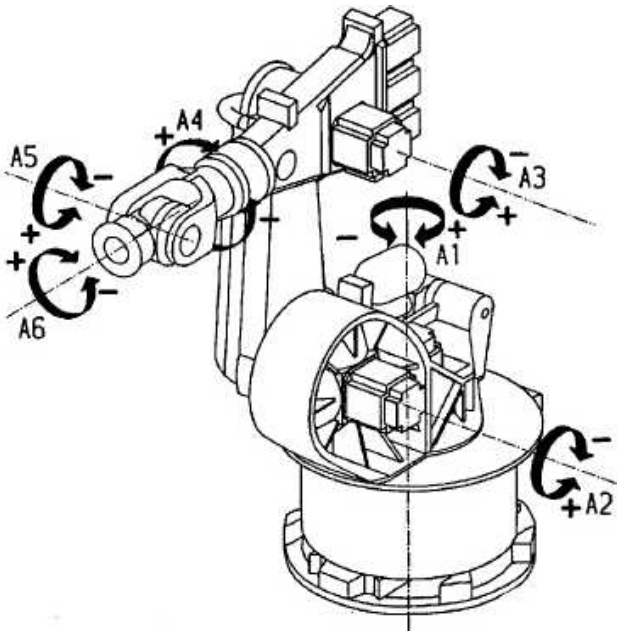

1--3 Drehachsen und Drehsinn beim Verfahren des Roboters
Rotational axes and directions of rotation in motion of the robot
Axes de rotation du robot et sens de rotation lors du déplacement des axes

Prüfmaß
Test dimension
Cote de contrôle

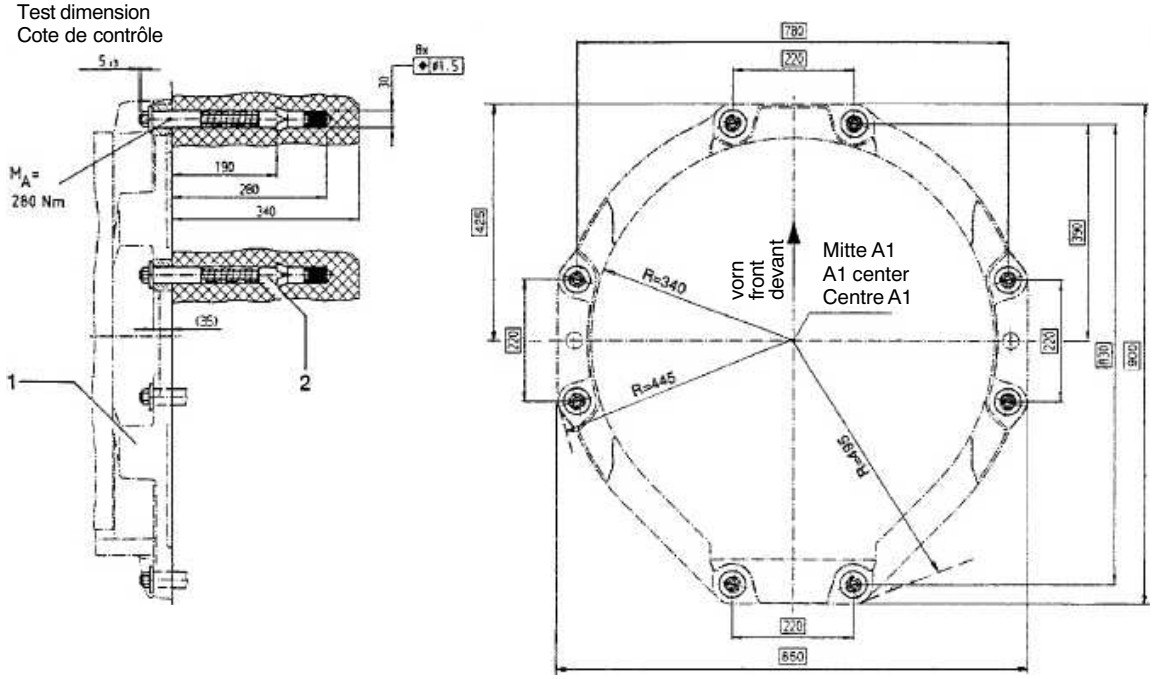

1 Dübelschraube
2 Roboter

1 Dowel bolt
2 Robot

1 Vis à cheville
2 Robot

1--4 Roboterbefestigung, Variante 1
Installation of the robot, variant 1
Fixation du robot, variante 1

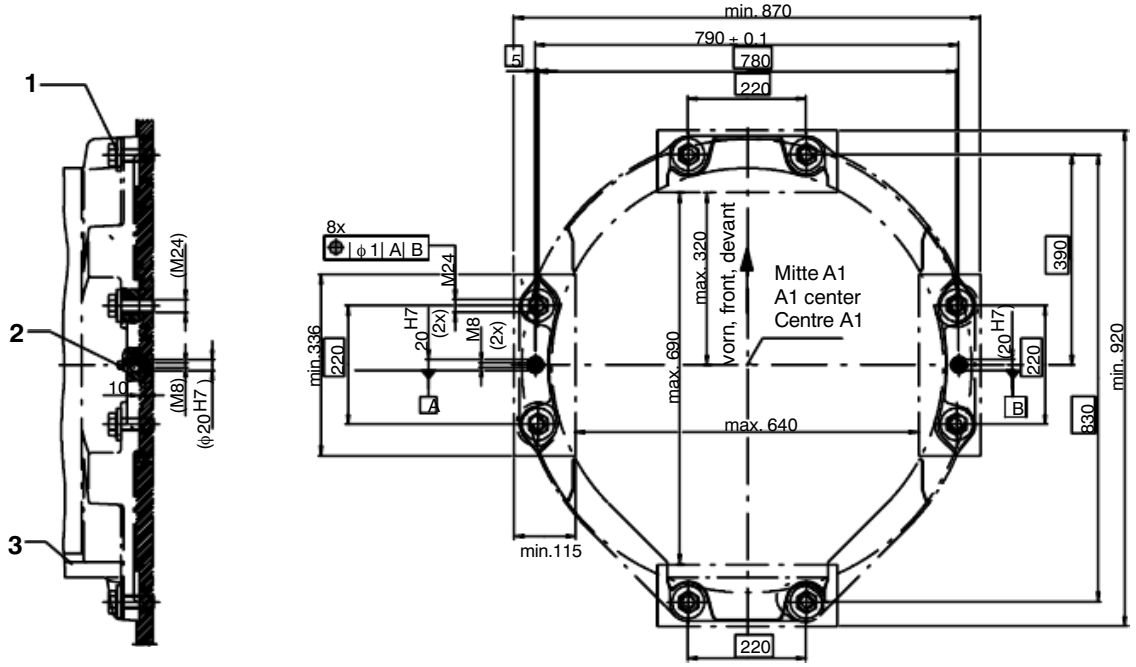

1 Sechskantschraube
2 Aufnahmebolzen
3 Roboter

1 Hexagon screw
2 Locating pin
3 Robot

1 Vis à tête hexagonale
2 Pied de centrage
3 Robot

1--5 Roboterbefestigung, Variante 2
Installation of the robot, variant 2
Fixation du robot, variante 2

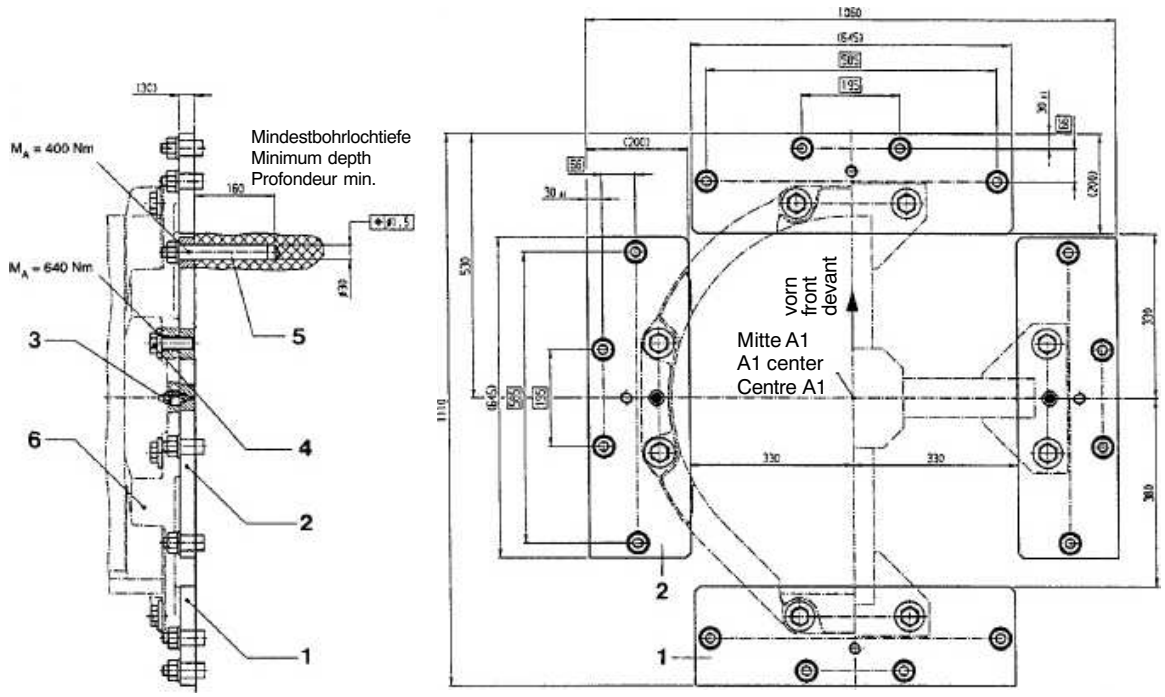

1	Zwischenplatte ohne Aufnahmebolzen	1	Intermediate plate without locating pin	1	Plaque intermédiaire sans pied de centrage
2	Zwischenplatte mit Aufnahmebolzen	2	Intermediate plate with locating pin	2	Plaque intermédiaire avec pied de centrage
3	Aufnahmebolzen	3	Locating pin	3	Pied de centrage
4	Schraube	4	Bolt	4	Vis
5	Dübelschraube	5	Dowel bolt	5	Vis à cheville
6	Roboter	6	Robot	6	Robot

1--6 Roboterbefestigung, Variante 3
Installation of the robot, variant 3
Fixation du robot, variante 3

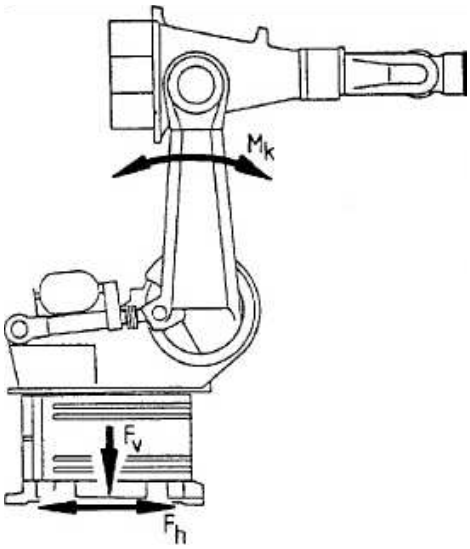

F_v	=	Vertikale Kraft	F_{vmax}	=	15 600 N
F_h	=	Horizontale Kraft	F_{hmax}	=	11 650 N
M_k	=	Kippmoment	M_{kmax}	=	27 000 Nm
M_r	=	Drehmoment um Achse 1	M_{rmax}	=	13 000 Nm
F_v	=	vertical force	F_{vmax}	=	15 600 N
F_h	=	horizontal force	F_{hmax}	=	11 650 N
M_k	=	tilting moment	M_{kmax}	=	27 000 Nm
M_r	=	turning moment about axis 1	M_{rmax}	=	13 000 Nm
F_v	=	Force verticale	F_{vmax}	=	15 600 N
F_h	=	Force horizontale	F_{hmax}	=	11 650 N
M_k	=	Moment de basculement	M_{kmax}	=	27 000 Nm
M_r	=	Moment de rotation autour de l'axe 1	M_{rmax}	=	13 000 Nm

Gesamtmasse = Total mass Masse totale	Roboter + robot robot	Gesamtlast total load charge totale	für Typ for type pour type
	975 kg +	245 kg	KR 125/1
	990 kg +	220 kg	KR 125 L100/1
	995 kg +	210 kg	KR 125 L90/1
	1120 kg +	245 kg	KR 150/1
	1120 kg +	280 kg	KR 200/1

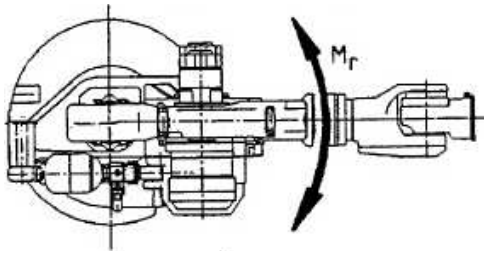

1--7 Hauptbelastungen des Bodens durch Roboter und Gesamtlast

Principal loads acting on floor due to robot and total load

Sollicitations principales au niveau du sol dues au robot et à la charge totale

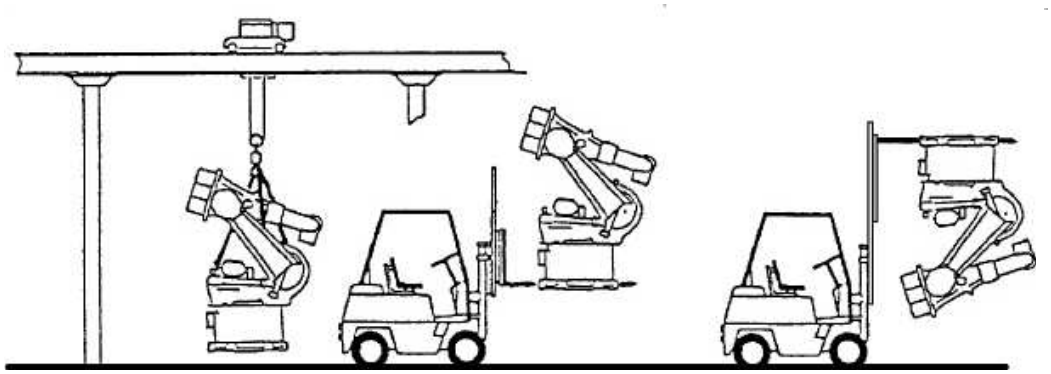

1--8 Transport des Roboters
Transporting the robot
Transport du robot

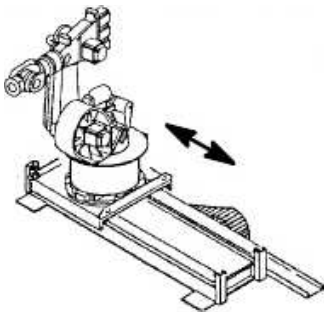

2--1 **Zusätzliche Linearachse**
Additional linear axis
Axe linéaire supplémentaire

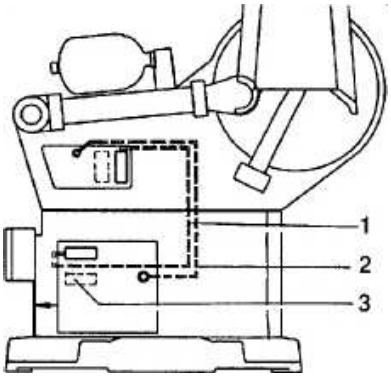

1 Steuerleitung 23x1 + 2x1 mm^2, geschirmt
2 Druckluftleitung 1/2”
3 Anschluß für zweite Steuerleitung

1 Control cable 23x1 + 2x1 mm^2, shielded
2 Compressed air 1/2”
3 Connection for second control cable

1 Câble de commande 23x1 + 2x1 mm^2, blindé
2 Flexible d’air comprimé 1/2”
3 Connexion pour deuxième câble de commande

2--2 **Energiezuführung A1, Handhaben**
Energy supply system A1, handling
Alimentation en enérgie A1, manutention

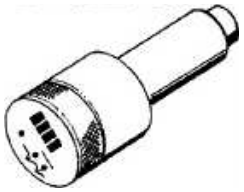

2--3 **Elektronischer Meßtaster für KTL-Justage--Set**
Electronic probe for KTL adjustment set
Mesureur électronique pour setde réglage KTL

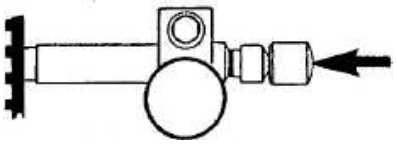

2--4 **Riemenspannungs--Prüfvorrichtung**
Belt tension checking device
Dispositif de contrôle de la tension de courroie

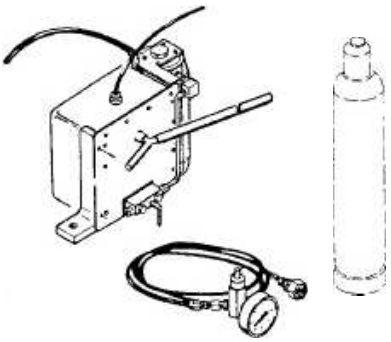

2--5 **Füll- und Prüfeinrichtung**
Filling and testing equipment
Appareils de remplissage et de contrôle

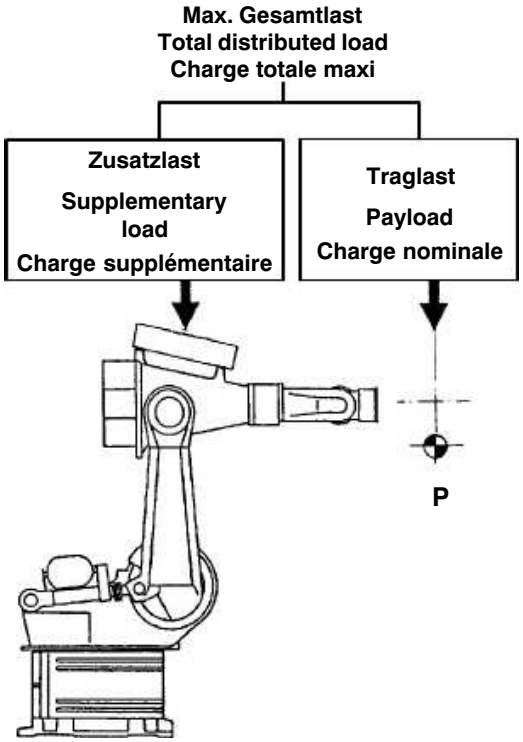

3--1 **Lastverteilung**
Distribution of the total load
Distribution de la charge

ACHTUNG:
Diese Belastungskennlinien entsprechen der äußersten Belastbarkeit! Ein Überschreiten geht in die Lebensdauer des Gerätes ein, überlastet im allgemeinen Motoren und Getriebe und bedarf auf alle Fälle der Rücksprache mit KUKA.

IMPORTANT:
These loading characteristics correspond to the maximum load capacity. Exceeding this capacity will reduce the service life of the robot and generally overload the motors and gears; in any such case KUKA must be consulted beforehand.

ATTENTION:
Les courbes de charge représentent la capacité de charge maximum! Un dépassement de cette capacitéréduitladuréedevie durobotet,enrèglegénérale, surcharge les moteurs ainsi que les engrenages et transmissions. Il faudra en tous cas consulter KUKA auparavant.

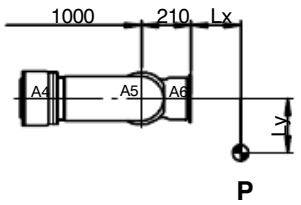

Traglast m	Eigenträgheitsmoment I_S * für KR 125/1
Payload m	Motor moment of inertia I_S * for KR 125/1
Charge nominale m [kg]	Moment d'inertie propre I_S * pour KR 125/1 [kg m^2]
125	17.5
115	16.1
105	14.7
95	13.3
85	11.9
75	10.5
65	9.1
55	7.7

* Eigenträgheitsmoment der Traglast, bezogen auf die durch den Schwerpunkt der Traglast gehende Drehachse.
* Motor moment of inertia of the payload, referred to the rotational axis passing through the center of gravity of the payload.
* Moment d'inertie propre de la charge nominale, rapporté à l'axe de rotation passant par le centre de gravité de la charge.

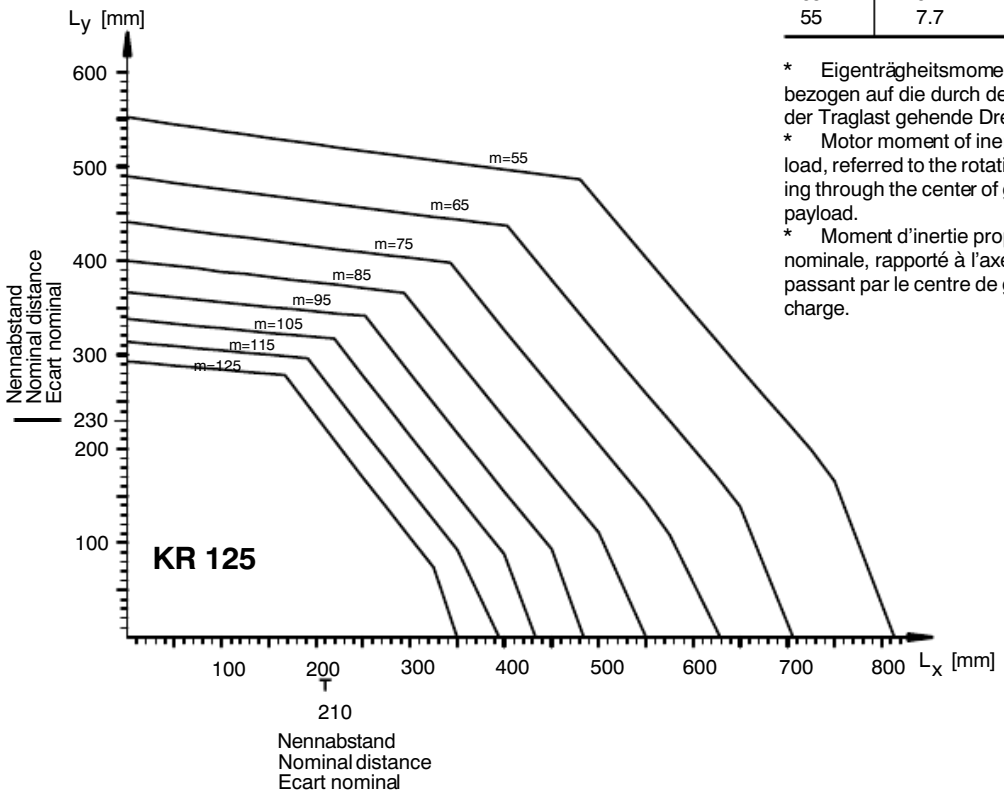

3--2 **Traglastangriffspunkt P und Belastungskennlinien für KR 125/1**
Point of payload application P and loading characteristics for KR 125/1
Point d'application de la charge P et courbes de charge pour KR 125/1

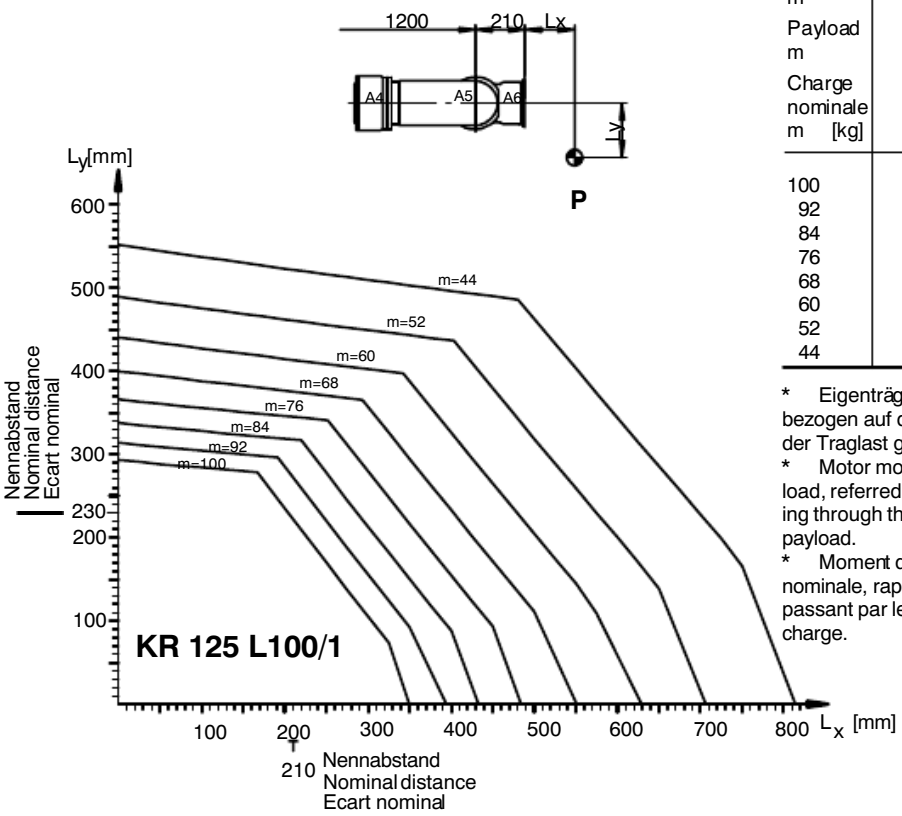

Traglast m	Eigenträgheitsmoment I_s * für KR 125 L100/1
Payload m	Motor moment of inertia I_s * for KR 125 L100/1
Charge nominale m [kg]	Moment d'inertie propre I_s * pour KR 125 L 100/1 [kg m^2]
100	14.0
92	12.7
84	11.5
76	9.8
68	8.8
60	7.8
52	6.6
44	5.6

* Eigenträgheitsmoment der Traglast, bezogen auf die durch den Schwerpunkt der Traglast gehende Drehachse.
* Motor moment of inertia of the payload, referred to the rotational axis passing through the center of gravity of the payload.
* Moment d'inertie propre de la charge nominale, rapporté à l'axe de rotation passant par le centre de gravité de la charge.

3--3 Traglastangriffspunkt P und Belastungskennlinien für KR 125 L100/1
Point of payload application P and loading characteristics for KR 125 L100/1
Point d'application de la charge P et courbes de charge pour KR 125 L100/1

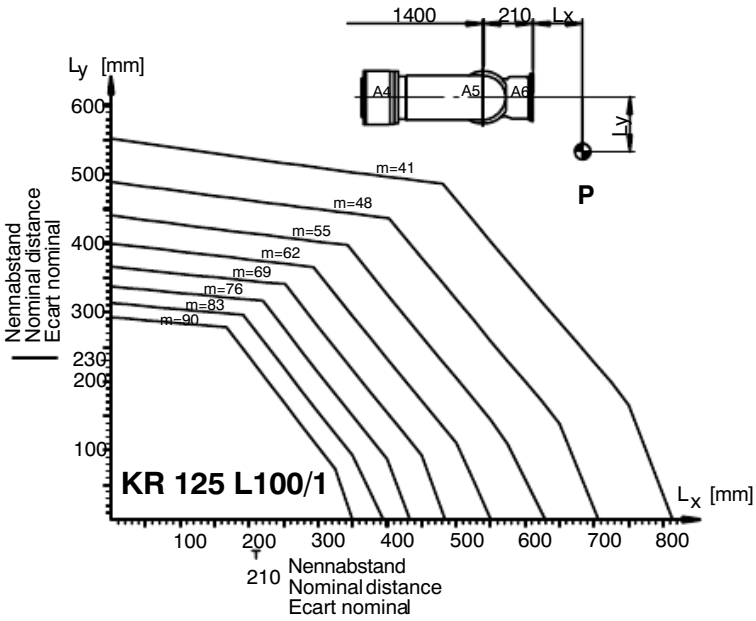

Traglast m	Eigenträgheitsmoment Is * für KR 125 L90/1
Payload m	Motor moment of inertia Is * for KR 125 L90/1
Charge nominale m [kg]	Moment d'inertie propre Is * pour KR 125 L 90/1 [kg m^2]
90	12.5
83	11.4
76	9.8
69	9.2
62	8.1
55	7.0
48	6.1
41	5.2

* Eigenträgheitsmoment der Traglast, bezogen auf die durch den Schwerpunkt der Traglast gehende Drehachse.
* Motor moment of inertia of the payload, referred to the rotational axis passing through the center of gravity of the payload.
* Moment d'inertie propre de la charge nominale, rapporté à l'axe de rotation passant par le centre de gravité de la charge.

3--4 Traglastangriffspunkt P und Belastungskennlinien für KR 125 L90/1
Point of payload application P and loading characteristics for KR 125 L90/1
Point d'application de la charge P et courbes de charge pour KR 125 L90/1

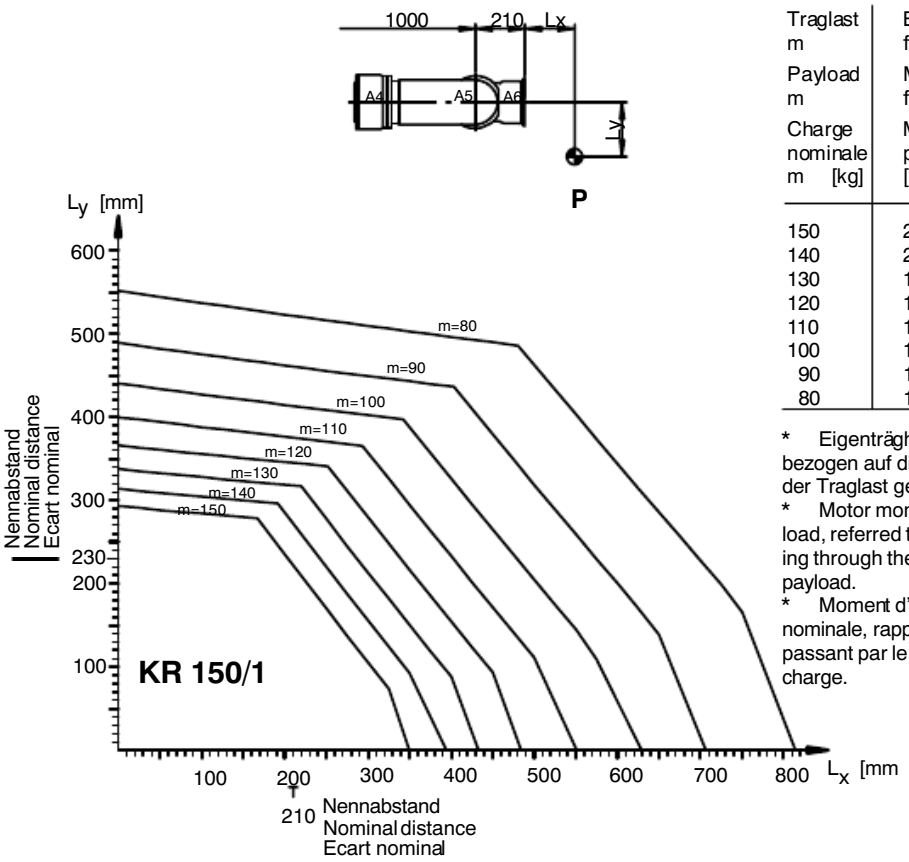

Traglast m	Eigenträgheitsmoment I_S * für KR 150/1
Payload m	Motor moment of inertia I_S * for KR 150/1
Charge nominale m [kg]	Moment d'inertie propre I_S * pour KR 150/1 [kg m^2]
150	22.0
140	20.5
130	19.1
120	17.6
110	16.1
100	14.7
90	13.2
80	11.7

* Eigenträgheitsmoment der Traglast, bezogen auf die durch den Schwerpunkt der Traglast gehende Drehachse.
* Motor moment of inertia of the payload, referred to the rotational axis passing through the center of gravity of the payload.
* Moment d'inertie propre de la charge nominale, rapporté à l'axe de rotation passant par le centre de gravité de la charge.

3--5 Traglastangriffspunkt P und Belastungskennlinien für KR 150/1
Point of payload application P and loading characteristics for KR 150/1
Point d'application de la charge P et courbes de charge pour KR 150/1

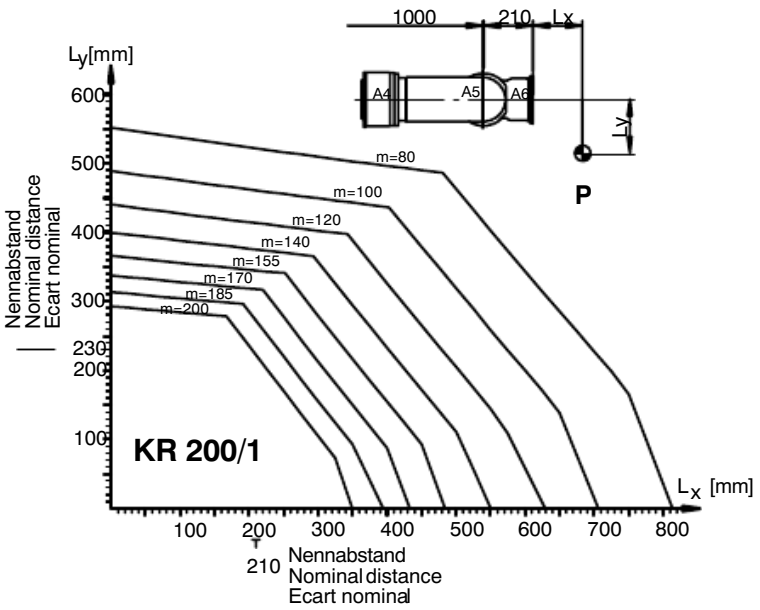

Traglast m	Eigenträgheitsmoment I_S * für KR 200/1
Payload m	Motor moment of inertia I_S * for KR 200/1
Charge nominale m [kg]	Moment d'inertie propre I_S * pour KR 200/1 [kg m^2]
200	28.0
185	25.9
170	23.8
155	21.7
140	19.6
120	16.8
100	14.0
80	11.2

* Eigenträgheitsmoment der Traglast, bezogen auf die durch den Schwerpunkt der Traglast gehende Drehachse.
* Motor moment of inertia of the payload, referred to the rotational axis passing through the center of gravity of the payload.
* Moment d'inertie propre de la charge nominale, rapporté à l'axe de rotation passant par le centre de gravité de la charge.

3--6 Traglastangriffspunkt P und Belastungskennlinien für KR 200/1
Point of payload application P and loading characteristics for KR 200/1
Point d'application de la charge P et courbes de charge pour KR 200/1

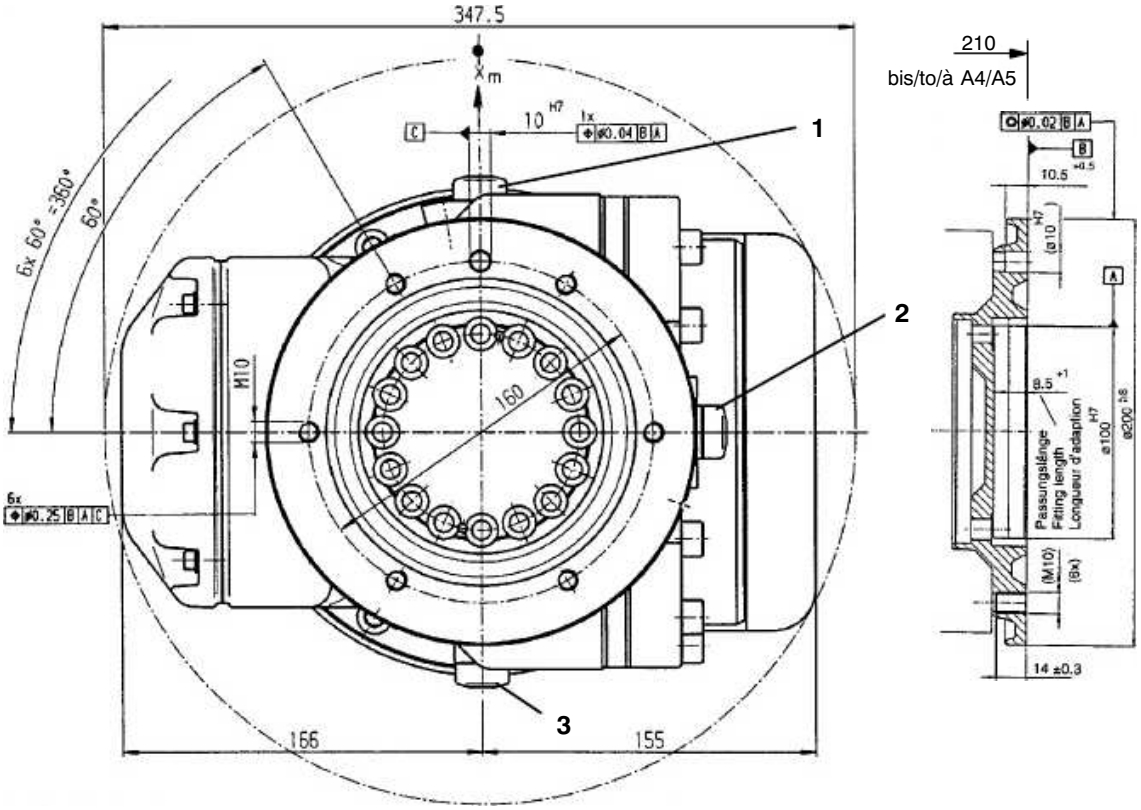

1 Meßpatrone A4
2 Meßpatrone A6
3 Meßpatrone A5

1 Gage cartridge A4
2 Gage cartridge A6
3 Gage cartridge A5

1 Cartouche de mesure A4
2 Cartouche de mesure A6
3 Cartouche de mesure A5

3--7 DIN/ISO-Anbauflansch für ZH 125/150/200 kg
DIN/ISO mounting flange for IW 125/150/200 kg
Bride de fixation DIN/ISO pour PL 125/150/200 kg

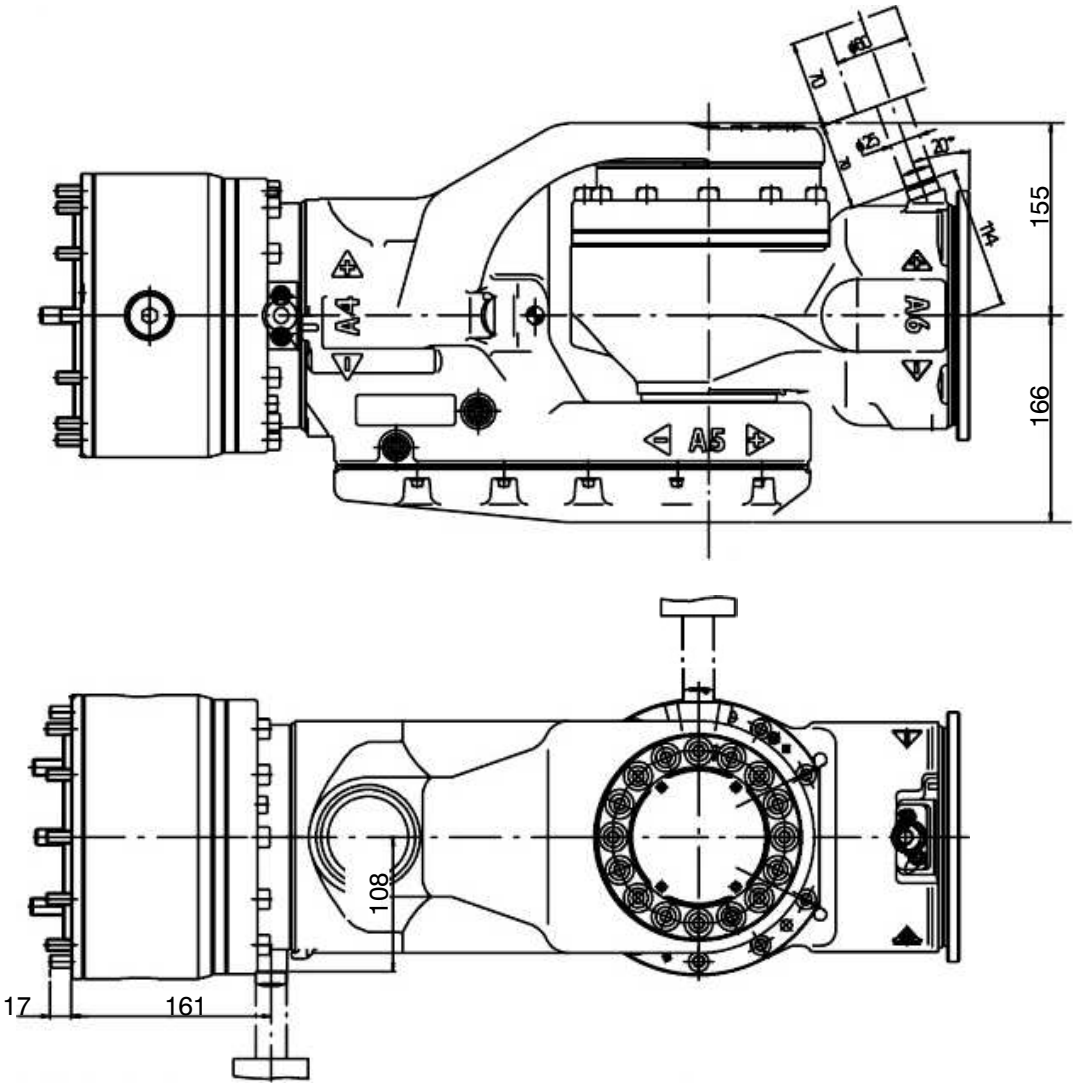

Für die Nullpunkt--Einstellung mit dem elektronischen Meßtaster (siehe Abschnitt 2.6) **bei angebautem Werkzeug** muß dieses so gestaltet sein, daß genügend Platz für Ein-- und Ausbau des Meßtasters bleibt.

For zero adjustment with the electronic probe (see Section 2.6) **when the tool is mounted**, the latter must be designed to allow sufficient space for installation and removal of the probe.

Pour le réglage du point zéro avec le palpeur de mesure électronique (voir par. 2.6) **lorsque l'outil est monté,** il faut qu'il soit telqu'on ait encore de la place suffisante pour le montage et le démontagedu palpeur.

3--8 Elektronischer Meßtaster, Anbau an A4, A5 und A6
Electronic probe, installation on A4, A5 and A6
Palpeur de mesure électronique, montage sur A4, A5 et A6

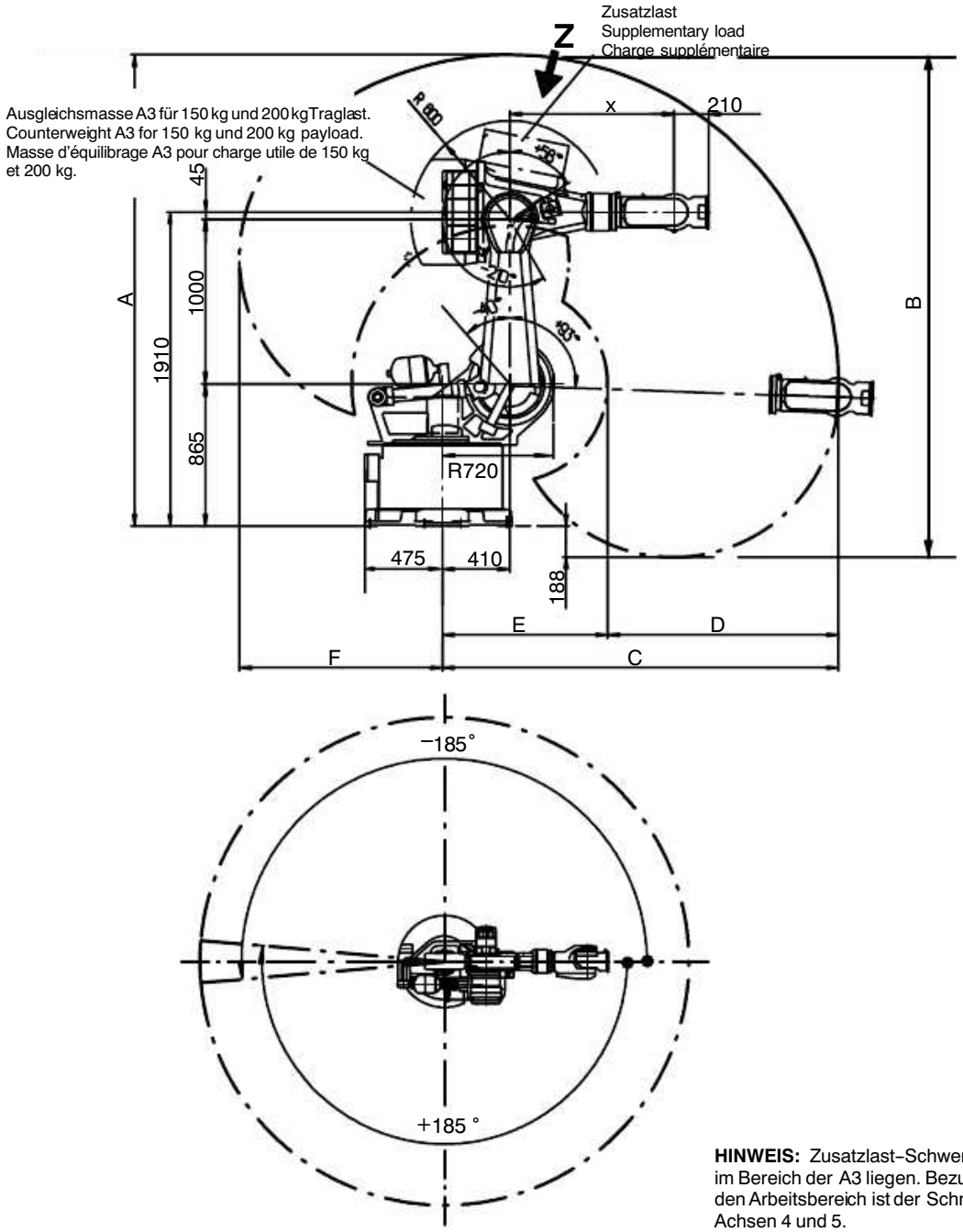

	A	B	C	D	E	F	X
KR 125/1	2866	3054	2410	1405	1005	1234	1000
KR 125 L100/1	3066	3454	2610	1525	1085	1434	1200
KR 125 L90/1	3266	3854	2810	1603	1207	1634	1400
KR 150/1	2866	3054	2410	1405	1005	1234	1000
KR 200/1	2866	3054	2410	1405	1005	1234	1000

HINWEIS: Zusatzlast–Schwerpunkt muß im Bereich der A3 liegen. Bezugspunkt für den Arbeitsbereich ist der Schnittpunkt der Achsen 4 und 5.

NOTE: The center of gravity of the supplementary load must be located near A3. The reference point for the working envelope is the intersection of axes 4 and 5.

REMARQUE.- Centre de gravité de la charge utile supplémentaire devant être dans la zone de A3. Le point de référence de l'enveloppe d'évolution est le point d'intersection des axes 4 et 5.

3--9 Hauptabmessungen (softwarebezogen) und Arbeitsbereich des KR 125/1, 150/1, 200/1
Principal dimensions (software values) and working envelope of the KR 125/1, 150/1, 200/1
Dimensions principales (se rapportant au logiciel) et enveloppe d'évolution du KR 125/1, 150/1, 200/1

Ansicht Z siehe Bild 3-9
View Z see figure 3-9
Vue Z voir figure 3-9

Befestigungsbohrungen für Zusatzlast.
Attachment holes for supplementary load.
Trous de fixation des charges supplémentaires.